CYGNUS electronics

DATASHEET

CN-Nord Max Air LTE

CYGNUS electronics

Panel de control profesional híbrido
Nord Max Air LTE

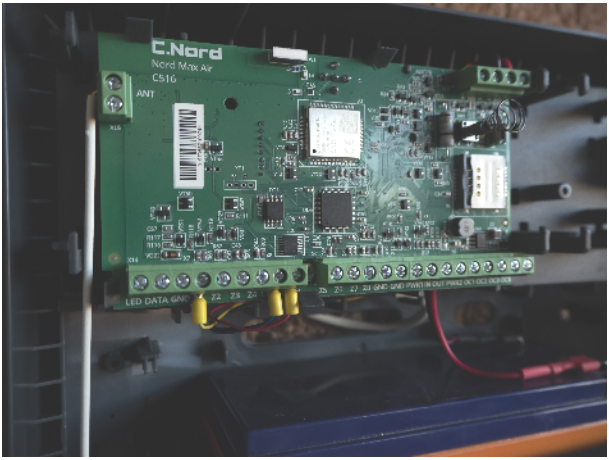

Comunicador LTE dual SIM interconstruido

Módulo Ethernet

- 8 (16) zonas por cable
- Duplicación de zonas sin expansor
- Hasta 31 zonas inalámbricas, 433-434 MHz
- 4 salidas PGM
- Entradas independientes: sensor de temperatura / lector RFID
- 48 particiones, 64 usuarios
- Antena celular integrada
- Transformador de voltaje 110-240V
- Batería 7.2 Ah, 12V – hasta 61 hora de autonomía

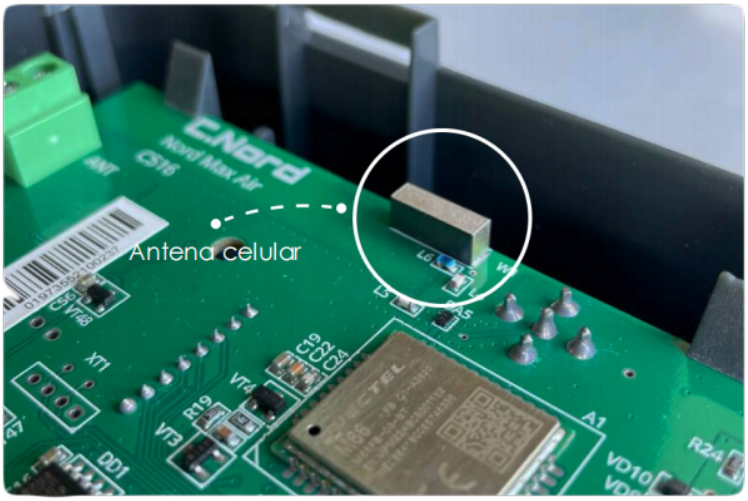

Mejor comunicación LTE e Ethernet

- Módulo Ethernet
- Antena multibanda integrada en la placa
- Entrada SMA para antena externa (opcional)
- Comunicador 2G/4G de doble SIM interconstruido
- Cambio automático al segundo canal dentro de 90 seg

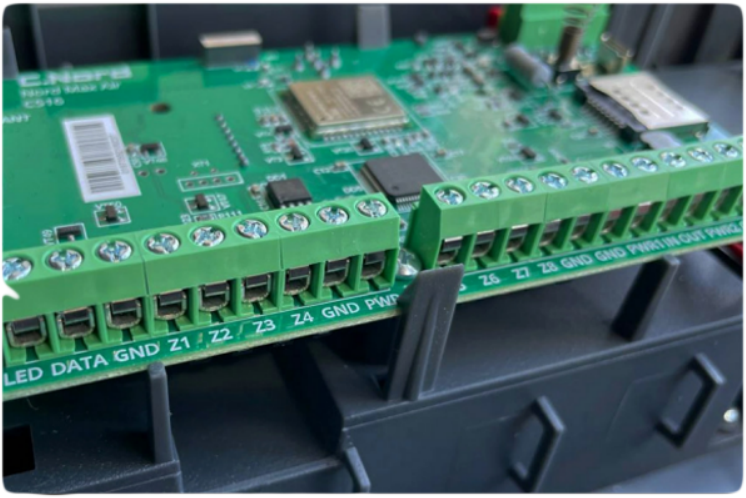

Zonas cableadas e inalámbricas

- 8 zonas por cable en la placa
- Duplicación de zonas por cable
- 31 zona inalámbrica, 433-434 MHz
- 4 salidas PGM para equipos de domótica
- Mejor alcance de los dispositivos inalámbricos

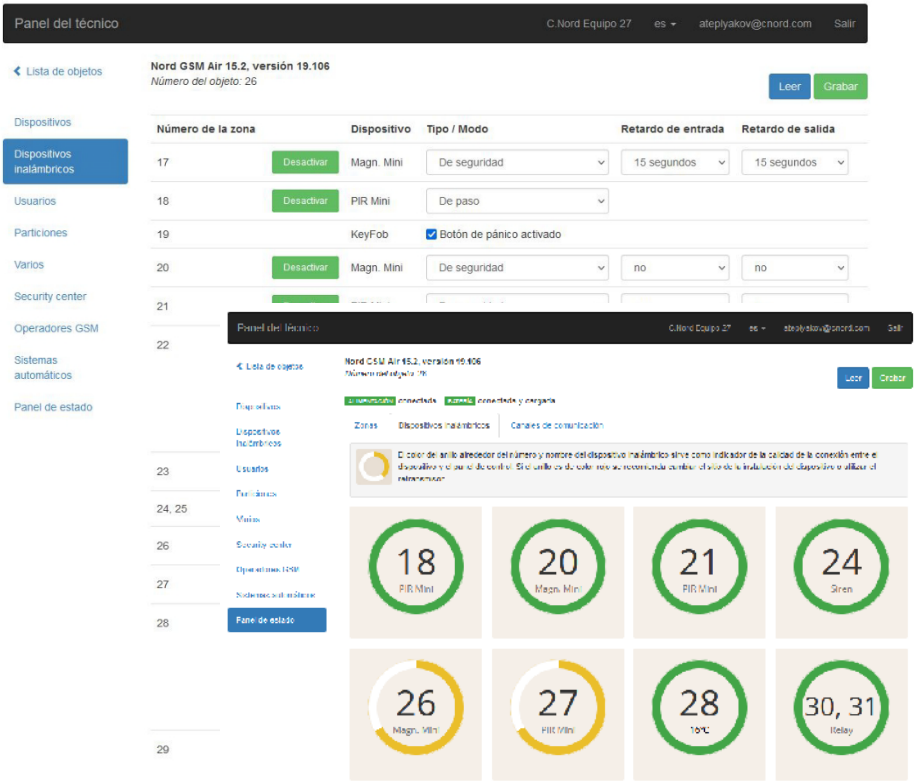

Configuración. Hubble (PC, Web)

- Interfaz amigable para una configuración rápida
- Configuración y actualización remota
- Comprobación de los canales de comunicación
- Visualización rápida del estado del sistema
- El sistema registra quién se conecta al equipo y que comandos ejecuta

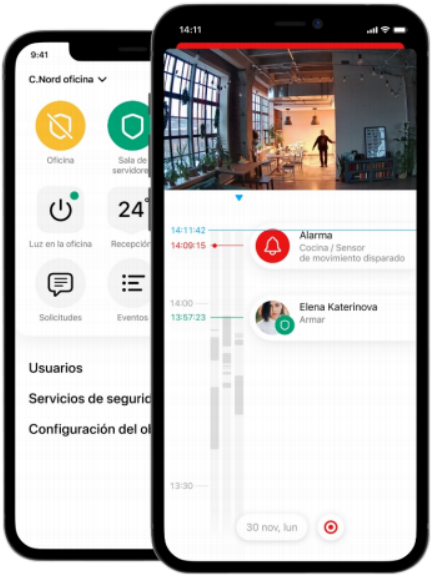

MyAlarm

- Android y iOS
- Historial de eventos
- Control de domótica
- Botón de pánico virtual
- Personalizable con su logo
- Solicitudes de mantenimiento
- Notificaciones Push y por voz

- Acceso por Face ID, huella dactilar, PIN
- Arme/desarme remoto de cada partición
- Videovigilancia integrada en la misma app
- Eventos desde el panel en el histórico del video
- Sensores tecnológicos (humo, agua, temperatura)
- Saldo de la cuenta personal y aviso sobre deudas

Supply Kit

Description	Q-ty, pcs.
Nord Max Air LTE Control Panel	1
Fuse: VPB6-7-1,0 A 250V	1
Resistor 0.25 W - 2.2 kΩ ± 5 %	16
Resistor 0.25 W - 4.3 kΩ ± 5 %	16
External GSM/LTE-antenna	1
Passport	1
Tracing Paper	1
Packaging	1

Specifications

Parameter	Value
Primary power supply	AC power supply 50 Hz or 60 Hz 90÷264 V
Backup power supply	Lead-Acid Battery 12.6 ± 0.6 V
Primary power supply consumption current: mains 220 V mains 110 V	 max 150 mA max 300 mA
Rated voltage of internal power supply source	14 V ± 0.28 V
Max backup power supply consumption current	1300 mA
Rated backup power supply consumption current	70 mA
Power consumption of the Ethernet Adapter optional module	1.0 W
Number of open collector outputs	4
Parameters of sensor power outputs (PWR1): Rated voltage	14V
Max allowable total current	750 mA
Parameters of open collector outputs for controlling external connected devices: Max commutation voltage of each output	30V

Max total commuted current	1000 mA
Max current provided by the panel for external connected devices: at PWR1 output (two terminals)	750 mA
at PWR2 output	1000 mA
max total current for three outputs	1000 mA
Number of controlled wired zones: base configuration includes control over 4-states of each wired zone	8
base configuration includes control over 2-states of each wired zone	16
with NB-EX81 expander includes control over 4-states of each wired zone	16
Max allowable total resistance for two wires of max 330 Ω each zone	16
Resistance of wired zone terminal resistors	(2.20±0.11) kΩ (4.30±0.22) kΩ
Max number of wireless devices supported via radio channel	31
Mobile communication standard	GSM / LTE, 2G, 4G
Type of connector for external GSM-antenna	SMA
Operating temperature range when using primary power supply (with fully charged or off-line battery) The	-30...+50 °C
Dimensions	259 x 225 x 82 mm
Weight w/o battery	0.815 kg

Application

The Control Panel is designed for use in residential and commercial real estate property. The panel creates messages about breach of security zones and sends them to the Security Center via GSM/LTE cellular channels and Ethernet (optional). The Control Panel is compatible with wireless equipment and hardwired equipment supplied by C.Nord SPb Ltd and by other manufacturers.

Pre-Starting Procedures

1. Insert one or two sim-cards in the slots. The slot closer to the board is for the primary sim-card while the upper slot is for the backup card.

2. Connect the backup and then primary power supply.

3. Utilize a Hubble Configurator to configure the control panel and connect it to the Security Center.

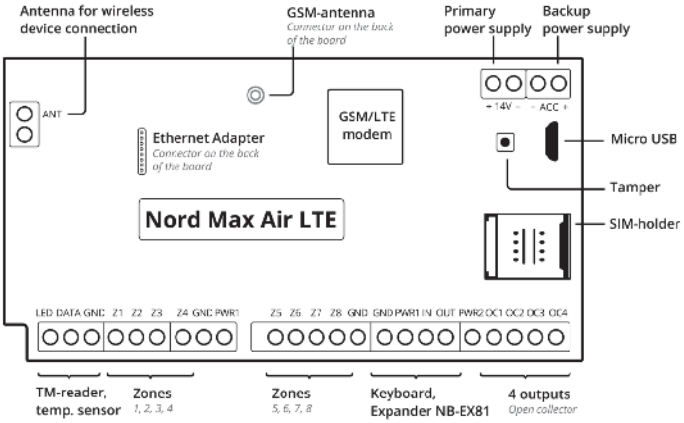

Control panels must be configured and connected only by qualified personnel.

Installation

1. Select a mounting location. It is recommended to install the control panel within a security zone where it cannot be seen by unauthorized persons or from the street.

2. Open the case of the panel.

3. Remove the plugs from the wire holes on the back of thecase. Insert the power cable and wired zones through the holes.

4. Put the back of the case across the wall and fix with self-tapping screws through mounting holes.

5. Connect the power cable and wired zones to the terminals of the panel.

6. Close the case.

CYGNUS
electronics